Robertson NZ Limited
Showroom: 25 Vestey Dr, Mt Wellington, Auckland, 1060
Phone: (64) 9 573 0490

SIMPLICITY DIVERTER MIXER CHROME

31280.02

$465

AMERICAN STANDARD

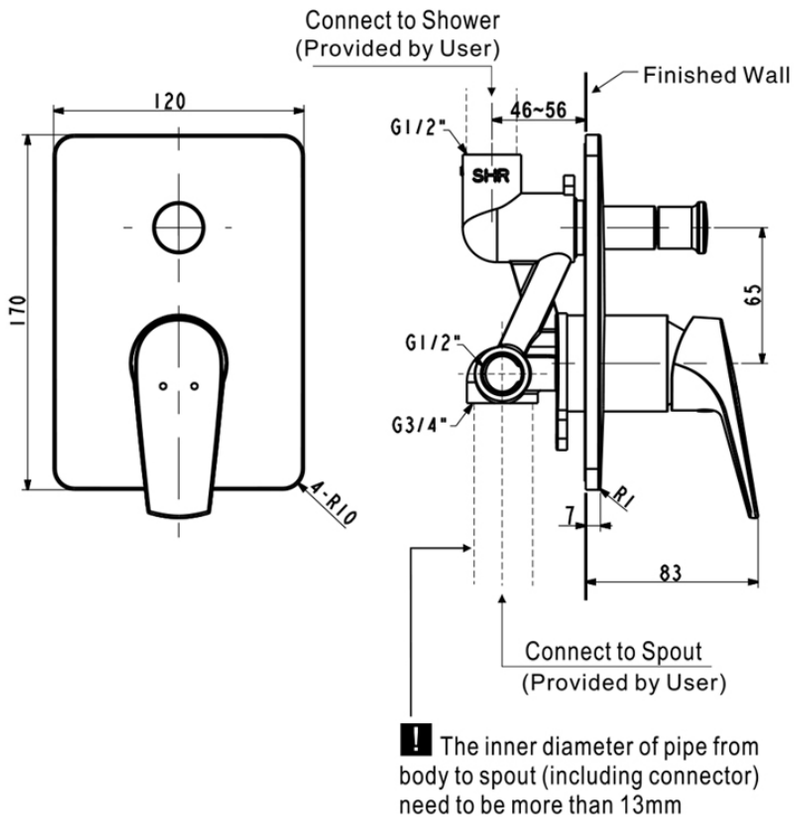

10	Guarantee	10 Year Guarantee
	Dripfree Guarantee	Drip Free Guarantee for Life of Mixer. Terms & Conditions apply.
	Mains Pressure	Suitable for Mains Pressure.
	DuraShine	Shiny chrome finishing gives an enduring brilliance.
	Comfort Move	Smooth handle performance for optimal precision and comfort.

True happiness needs nothing more than simplicity. Simplicity brings warmth and tenderness from every corner with its simple yet elegant design.